MTH-PC College Algebra Session 12 10/19

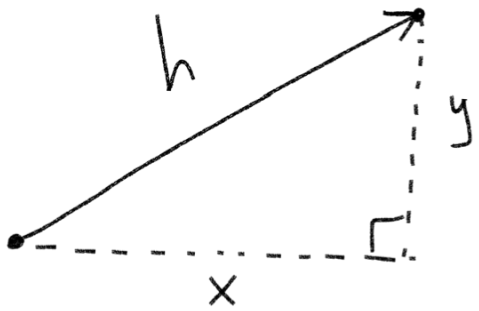

Right Triangle

Pythagorean Theorem

$$a^2 + b^2 = c^2$$

$$x^2 + y^2 = h^2$$

$$(5)^2 + (12)^2 = h^2$$

$$25 + 144 = h^2$$

$$\sqrt{169} = \sqrt{h^2}$$

$$13 = h$$

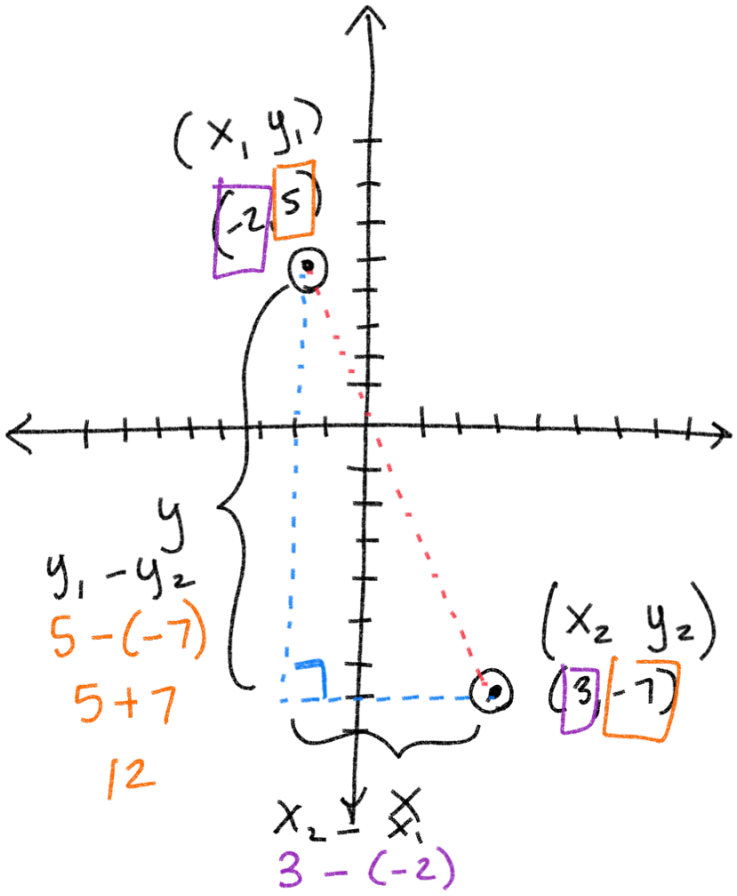

$$d = \sqrt{(\Delta x)^2 + (\Delta y)^2}$$

$$d = \sqrt{(x_2 - x_1)^2 + (y_2 - y_1)^2}$$

Distance Formula

$$d = \sqrt{(x_2 - x_1)^2 + (y_2 - y_1)^2}$$

(3, -7) (-2, 5)

x_2 y_2 x_1 y_1

$$d = \sqrt{(x_2 - x_1)^2 + (y_2 - y_1)^2}$$

$$= \sqrt{(3 - (-2))^2 + (-7 - 5)^2}$$

$$\sqrt{5^2 + (-12)^2} = \sqrt{25 + 144}$$

$$\sqrt{169} = 13$$

Midpoint Formula

Midpoint → half way, middle

Average

$$\left(\frac{x_2+x_1}{2}, \frac{y_2+y_1}{2}\right)$$

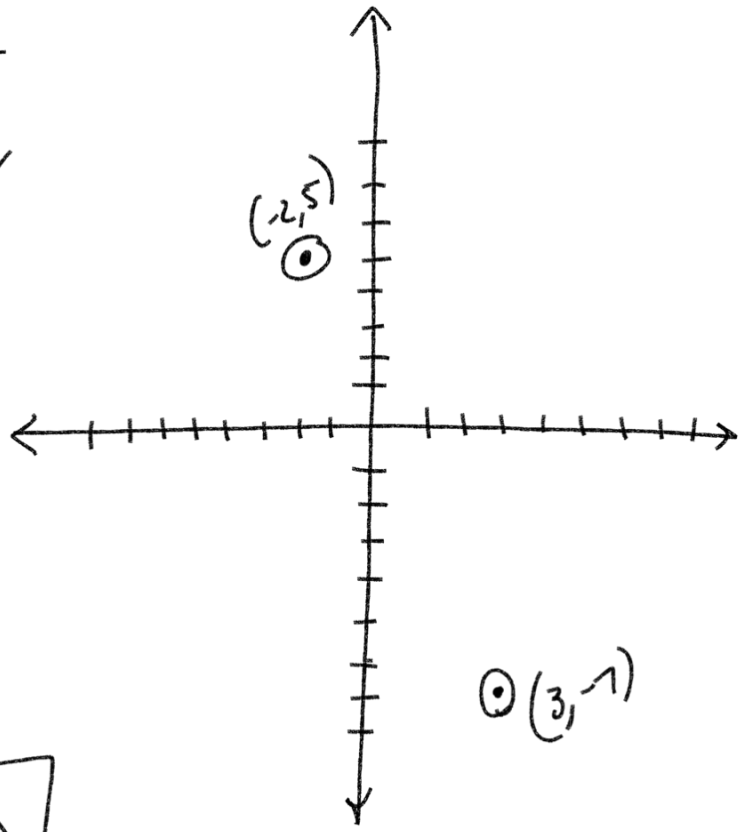

$$\left(\frac{-2+3}{2}, \frac{5+(-7)}{2}\right)$$

$$\left(\frac{1}{2}, \frac{-2}{2}\right) = \boxed{\left(\frac{1}{2}, -1\right)}$$

Find the distance and midpoint between the points $(-2,-7)$ and $(4,1)$

$$d = \sqrt{(x_2-x_1)^2 + (y_2-y_1)^2}$$

$$= \sqrt{(4-(-2))^2 + (1-(-7))^2}$$

$$\sqrt{(4+2)^2 + (1+7)^2}$$

$$\sqrt{6^2 + 8^2} = \sqrt{36+64}$$

$$\sqrt{100} = \boxed{10}$$

midpoint → Average

$$\left(\frac{x_2+x_1}{2}, \frac{y_2+y_1}{2}\right)$$

$$\left(\frac{4+(-2)}{2}, \frac{-7+1}{2}\right)$$

$$\left(\frac{2}{2}, \frac{-6}{2}\right)$$

$$\boxed{(1, -3)}$$

Graph. ①

$y = -3x + 2$ y-int

$y = mx + b$

slope

slope $= \frac{-3}{1} = \frac{\text{rise}}{\text{run}}$

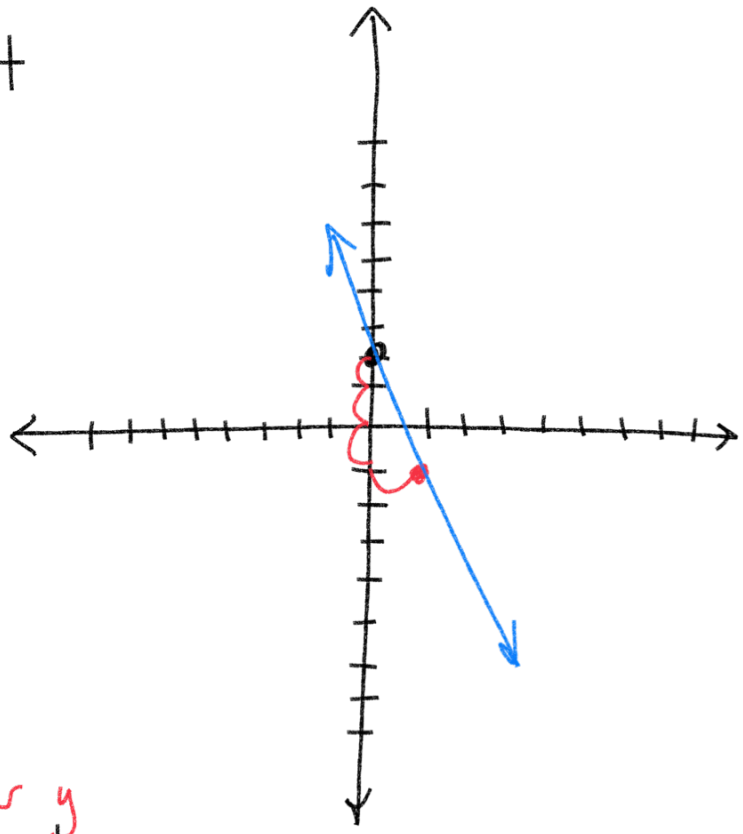

Graph. symmetry over y

$y = x^2 - 2x \boxed{+1}$ y-int

parabola

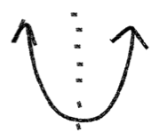

symmetrical

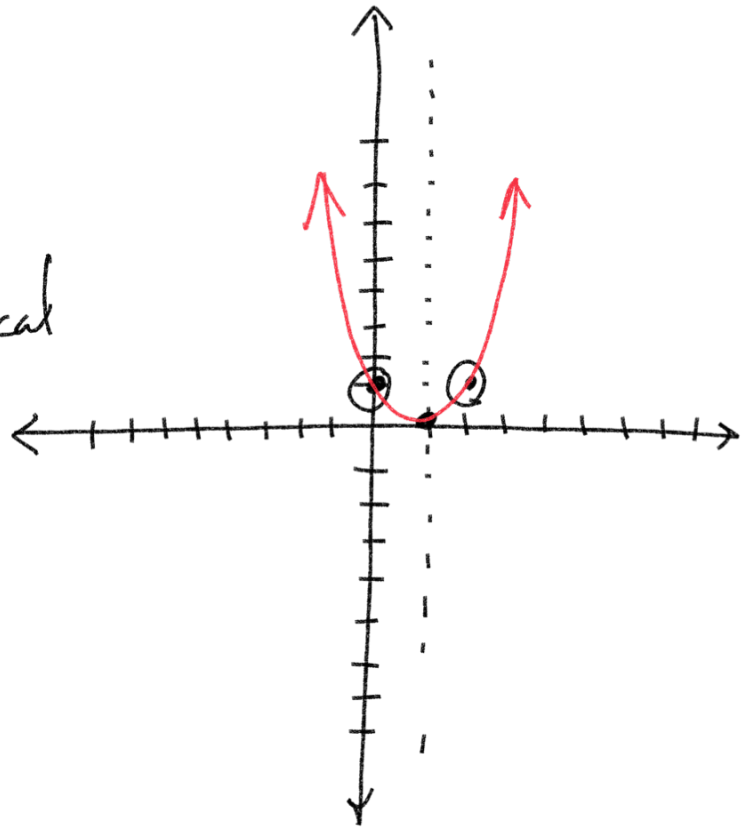

points

y-int

x-int(s)

vertex

$x = 0$ y-int

$(0)^2 - 2(0) + 1 = 1$

$y = 0$ x-int

$0 = x^2 - 2x + 1$

$\underline{-1} * \underline{-1} = 1$ $\quad 0 = (x-1)(x-1)$ $\quad \boxed{x = 1}$

$\underline{-1} + \underline{-1} = -2$ $\quad x - 1 = 0$ $\quad x - 1 = 0$

$+1 \quad +1$ $\quad +1 \quad +1$

$$\frac{3+(-5)}{2} = \frac{-2}{2} = -1$$

② ↓

$y = x^2 + 2x - 15$

↓

$y = (-1)^2 + 2(-1) - 15$

$1 - 2 - 15 = -16$

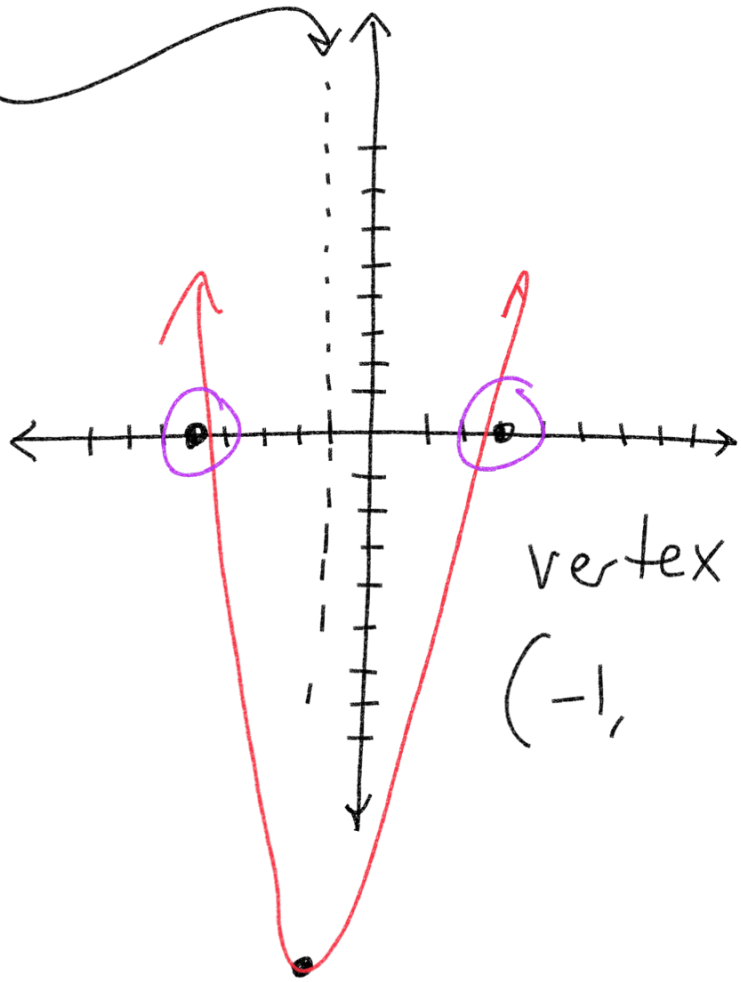

vertex

(-1,

Symmetry

$y = x^2 + 4$

↓

$x = y^2 + 4$

$-4 \quad -4$

$\sqrt{x-4} = \sqrt{y^2}$

$\pm\sqrt{x-4} = y$

(L) $y = \sqrt{x-4}$ (R) $y = -\sqrt{x-4}$

$x = 4 \quad y = 0 \quad x = 5 \quad y = 1 \quad x = 8$

symmetry over X

parabola

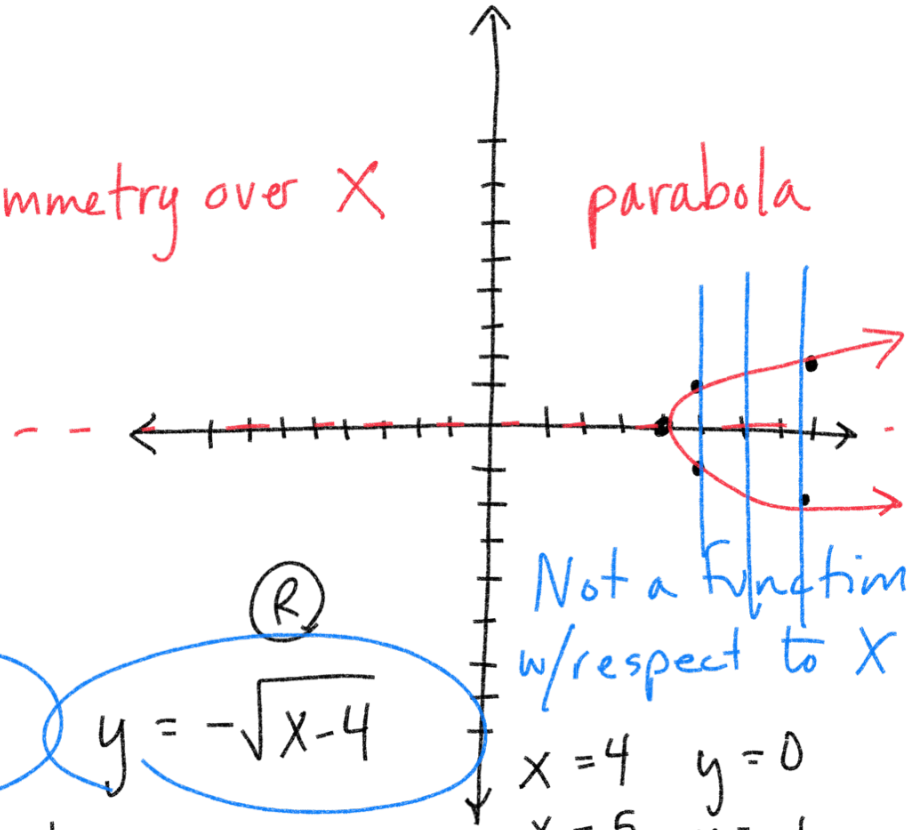

Not a function w/respect to X

$x = 4 \quad y = 0$

$x = 5 \quad y = -1$

$x = 8 \quad y = -2$

Even - Odd Functions

Even Function → symmetry about y-axis

Odd Function → symmetry about $y = x$

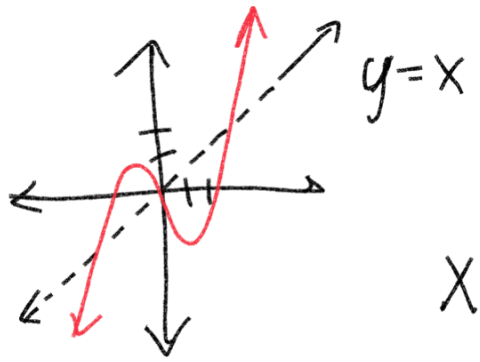

$y = x^2 + 4$ Even function

$4x^0 = 4(1)$

$X = 3 \quad y = (3)^2 + 4$

$9 + 4 = 13$

Even Function

$f(x) = f(-x)$

$X = -3$ every $y = (-3)^2 + 4$

$9 + 4 = 13$

$y = x^{(2)} + 4$

$y = x^6 + x^4 + 7x^2$ every exponent is even

even function

Odd Function

$f(-x) = -f(x)$

$f(-4) = -f(4)$

$y = x^3 + 3x$ odd

$X = -4 \quad (-4)^3 + 3(-4)$

$-64 + (-12) = -76$

$X = 4 \quad (4)^3 + 3(4)$

$64 + 12 = 76$

$y = x^{12} + 7x^4$ even

$y = 4x^5 - 3x$ odd

$y = 9x^2 + 2$ even

$y = 3x^3 + 8$ neither → $8x^0$

$y = 2x^3 + 4x^2$ neither

Equation for a Circle

$$(x-h)^2 + (y-k)^2 = r^2$$

center (h, k)

$$x^2 + y^2 = 4$$

$$(x-0)^2 + (y-0)^2 = 2^2$$

Center: $(0, 0)$

radius $= 2$

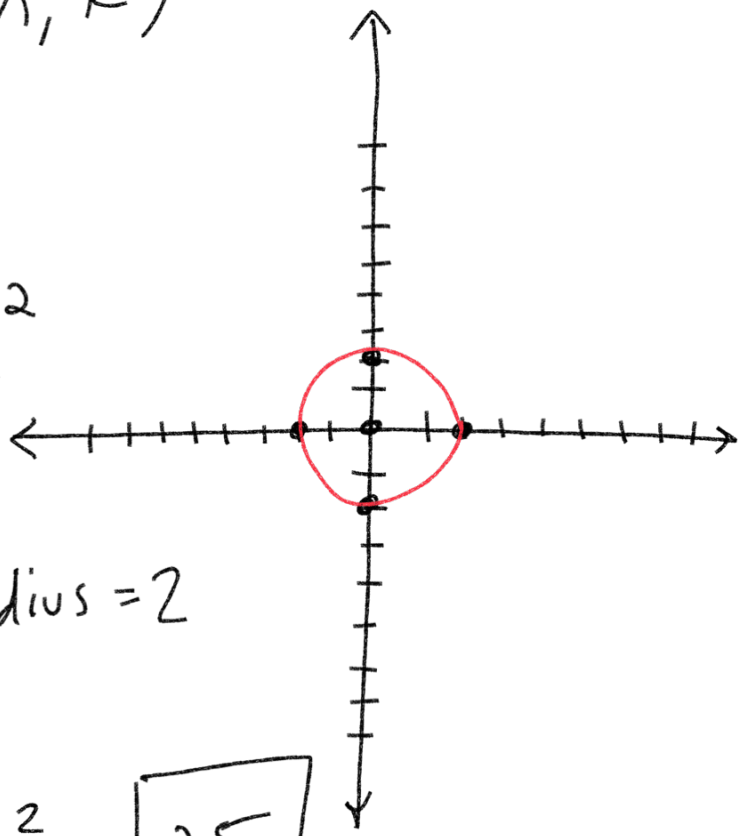

$$(x-2)^2 + (y+5)^2 = \boxed{25}$$

switch sign

center: $(2, -5)$

radius $= \sqrt{25} = 5$

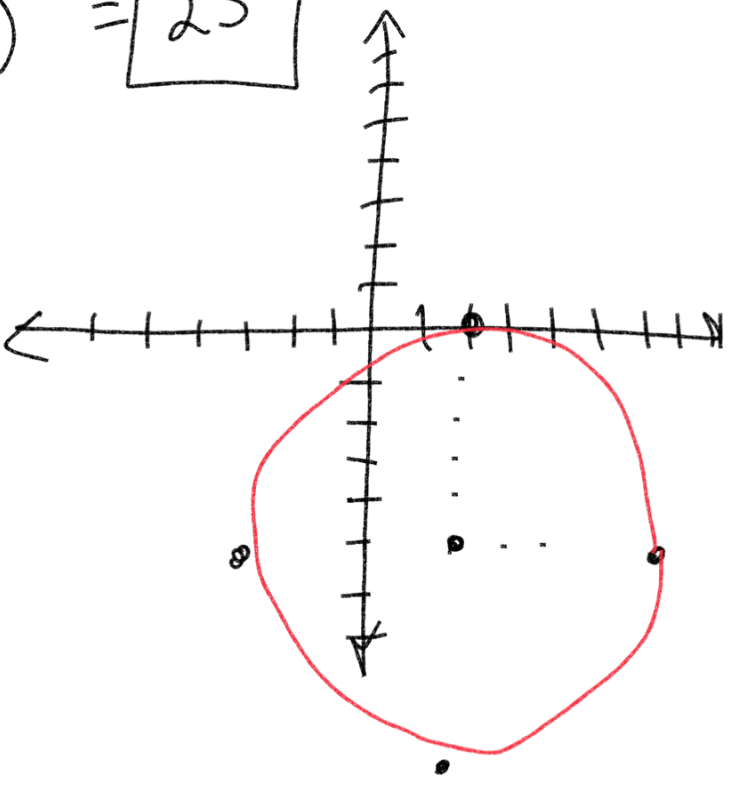

Write the equation for a circle with centre $(5,7)$ radius $= 9$

$$(x-5)^2 + (y-7)^2 = 9^2$$

$$\boxed{(x-5)^2 + (y-7)^2 = 81}$$